Mike.Lurk@ultraflovalve.com [10/29/2025 2:42:33 PM]

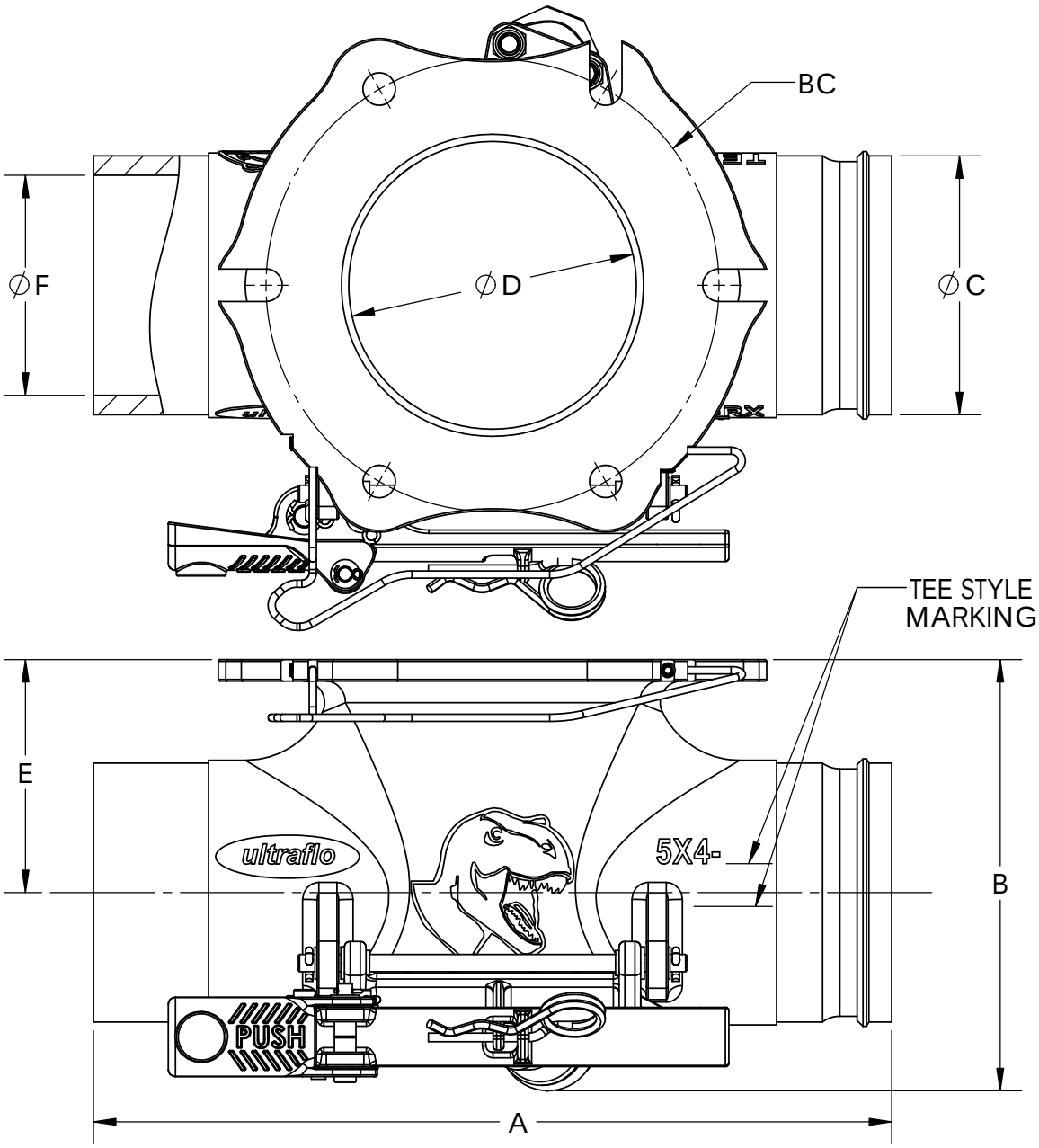

TEE DIMENSIONS

SIZE	A	B	C	D	E	F	WGHT/LB.	B. CIRC	HOLES	HOLE DIA.	MATERIAL
5X4RX-UT	13.88	7.50	4.50	5.0	4.05	3.83	28.60	7.875	6	.563	ADI
5X4RX-TEE	13.88	7.63	4.50	5.0	4.18	3.83	15.06	7.875	6	.563	ALUMINUM
6X4RX-UT	13.88	7.50	4.50	6.0	4.05	3.83	28.90	9.00	8	.563	ADI
6X4RX-TEE	13.88	7.63	4.5	6.0	4.18	3.83	15.46	9.00	8	.563	ALUMINUM

NOTES:

RX-UT: PLAIN BY U-GROOVE IS SHOWN. U-GROOVE BY PLAIN AND PLAIN BY PLAIN ARE ALSO AVAILABLE.

RX-TEE: AVAILABLE ONLY IN GROOVE BY GROOVE (NOT U-GROOVE).

ZONE	REV	DATE	BY	APP'D	ECN	DESCRIPTION
TB	2	6/27/17	JPL	JPL	753	ADD 6 INCH DATA TO TABLE
ALL	1	5/18/17	JPL	JPL	753	INITIAL RELEASE

THE INFORMATION CONTAINED HEREIN SHALL NOT BE COPIED, TRANSFERRED, CONVEYED OR DISPLAYED IN ANY MANNER THAT WOULD VIOLATE ITS PROPRIETARY NATURE WITHOUT THE EXPRESS WRITTEN PERMISSION OF THE ULTRAFLO CORPORATION.

TOLERANCES
(EXCEPT AS NOTED)
INCHES
.XX = ± 0.01
.XXX = ± 0.005
MILLIMETERS
.X = ± 0.2
.XX = ± 0.05
DEGREES = ± 1/2

ultraflo Ultraflo Corporation
A Subsidiary of Bray International, Inc.
#8 Trautman Ind. Dr.
Ste. Genevieve, Mo.
63670 800-950-1762

	NAME	DATE
DRAWN BY	JPL	5/18/17
CHECKED	JPL	5/18/17

TEE-RX
BOTTOM DROP

SIZE A | PART: TEE-RX BOTTOM DROP ADI AND ALUMINUM | REV 2

ECN: ECN | DWG: TEES-7 | SHEET 1 OF 1